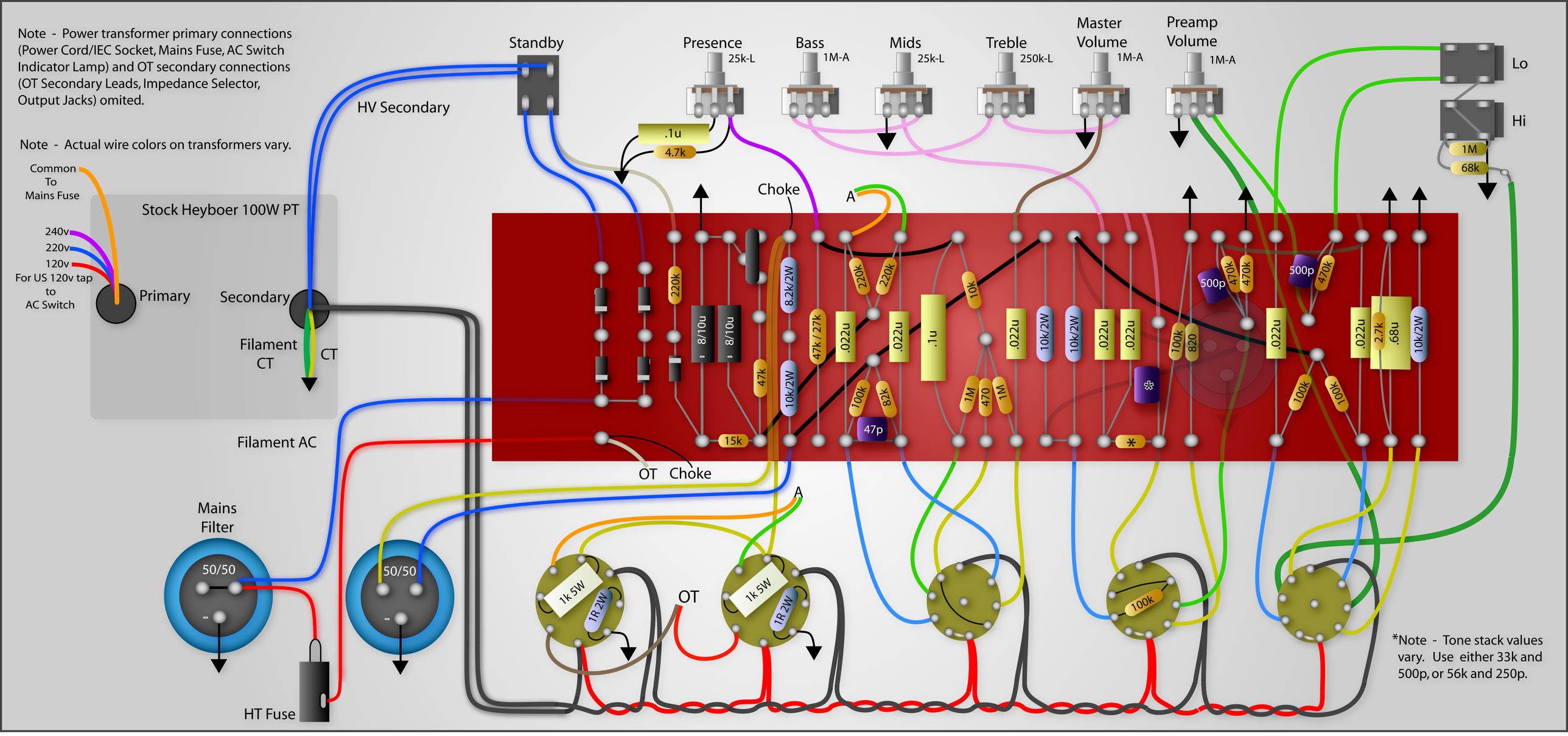
Note - Power transformer primary connections (Power Cord/IEC Socket, Mains Fuse, AC Switch Indicator Lamp) and OT secondary connections (OT Secondary Leads, Impedance Selector, Output Jacks) omited.
Note - Actual wire colors on transformers vary.
Common To Mains Fuse
240v
220v
120v
For US 120v tap to AC Switch
Stock Heyboer 100W PT
Primary
Secondary
Filament CT
CT
Filament AC
HV Secondary
Standby
Presence
25k-L
Bass
1M-A
Mids
25k-L
Treble
250k-L
Master Volume
1M-A
Preamp Volume
1M-A
Lo
Hi
1M
68k
.1u
4.7k
Choke
A
220k
8/10u
8/10u
47k
15k
8.2k/2W
10k/2W
47k / 27k
.022u
.1u
10k
100k
82k
47p
1M
470
1M
.022u
10k/2W
10k/2W
.022u
.022u
100k
820
500p
470k
470k
500p
470k
.022u
.022u
2.7k
.68u
10k/2W
100k
100k
OT
Choke
A
Mains Filter
50/50
50/50
HT Fuse
1k 5W
1R 2W
OT
1k 5W
1R 2W
100k
*Note - Tone stack values vary. Use either 33k and 500p, or 56k and 250p.